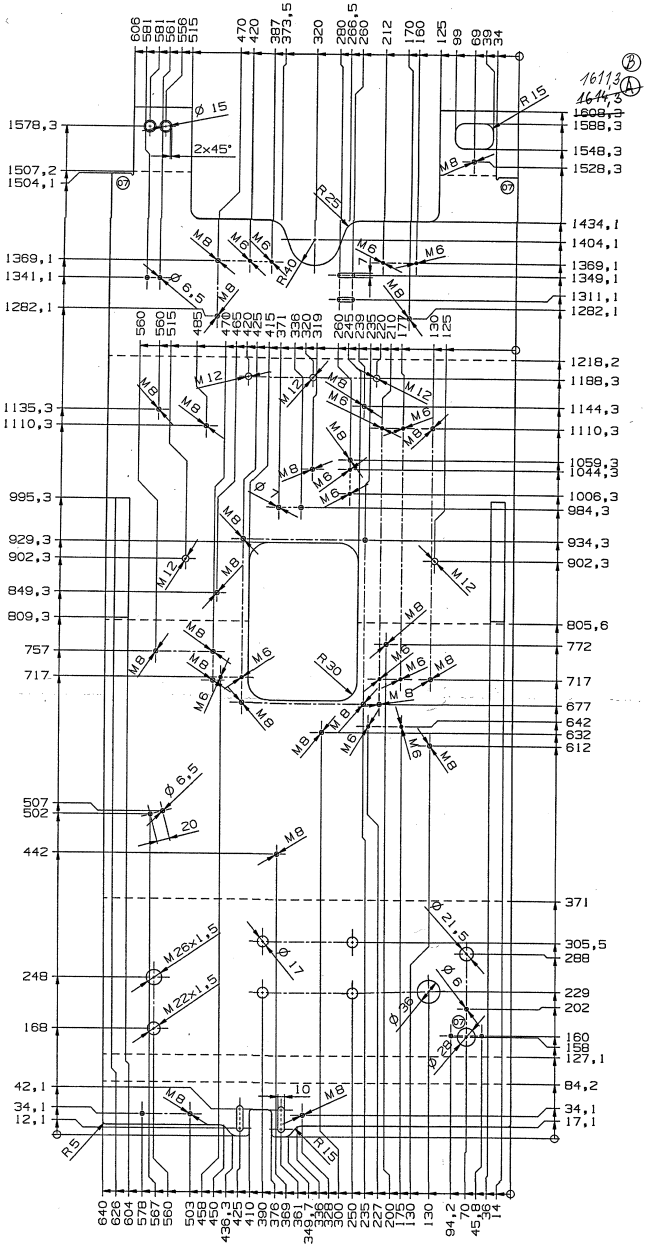

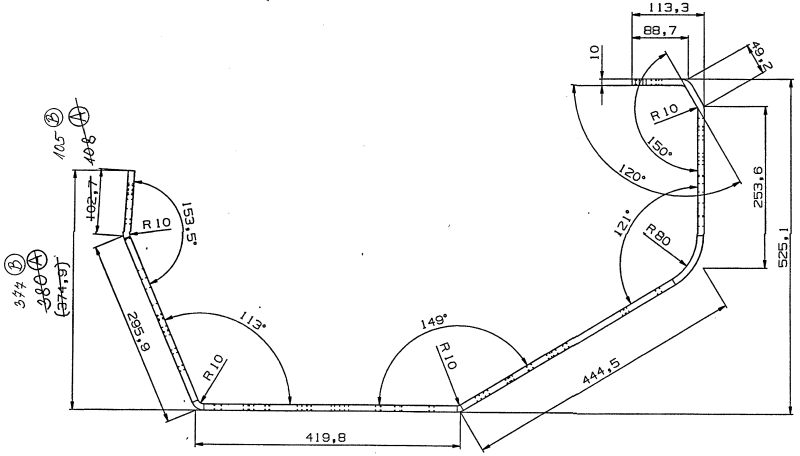

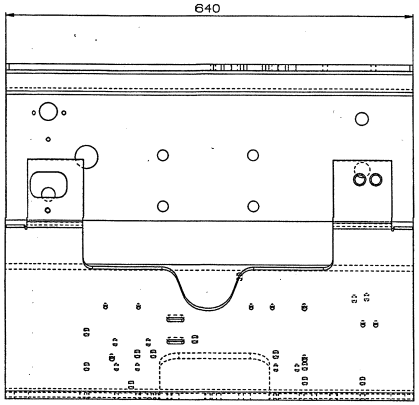

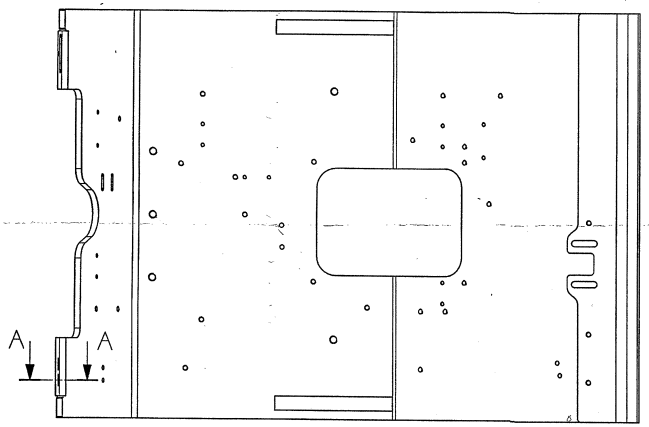

SECTION A-A

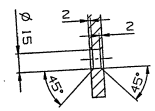

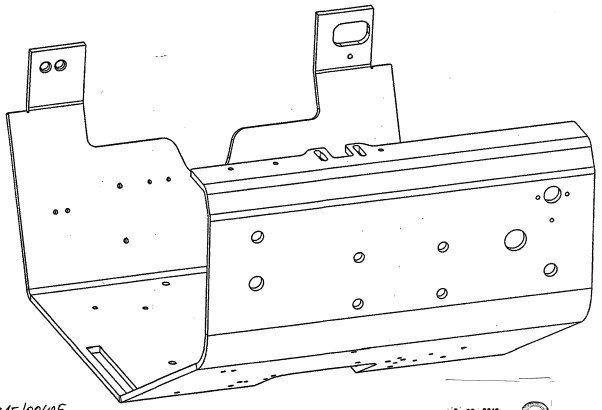

Ⓐ - ZM15/00319 PŘENESENA ZMĚNA NZ15/00425
11.1.2016 ing. Kuvar

Ⓑ ZM/16/00253 UPRAVENA CELKOVÁ DÉLKA ROZVINU Z 1614,3 NA 1611,3
2.3.2016 ing. Kuvar

ZM/15/00319

- 2 -03- 2016

ARCHIV 8

General tolerances for laser cutting DIN 2310 - 5 -IL up to 3mm / -IK over 3mm	[redacted]			APPROVED FOR	Serienfrei (F4)
General tolerances for nibbling / bending DIN 6930 - 2 - m				Welding Construction according to "Werknorm 43" Surface Quality according to "Werknorm 40" Theor. Weight according to "KR001-2003" Material according to "Werknorm 51"	
Scale 1 : 4	Original-Size A1	Standard Color		TEIL ÜBERARBEITET PART REWORKED	LNZSCHMG 11.11.2015 700000547
		Name LNZSCHMG	Date 19.11.2015	Count / Change / Material BS10	Name / Date / DCM-Nr / Theor. Weight (kg) 69.2
Bend Tolerance see DIN 6930 - 2 - m; Welding Tolerance see DIN EN ISO 13920-BF; General Tolerance see DIN ISO 2768 - mk; Surface Condition see DIN ISO 1302; Laser-Cut Tolerance see DIN 2310-5-IL up to 3mm / -IK over 3mm				Name Motorwanne	
				Additional Text	
Copyright reserved to ISO 16016		Mat-Nr		Doc-Nr 2000130391	Version 07 A8